ROOF FRAMING PLAN

SCALE : 1/4" = 1'-0"

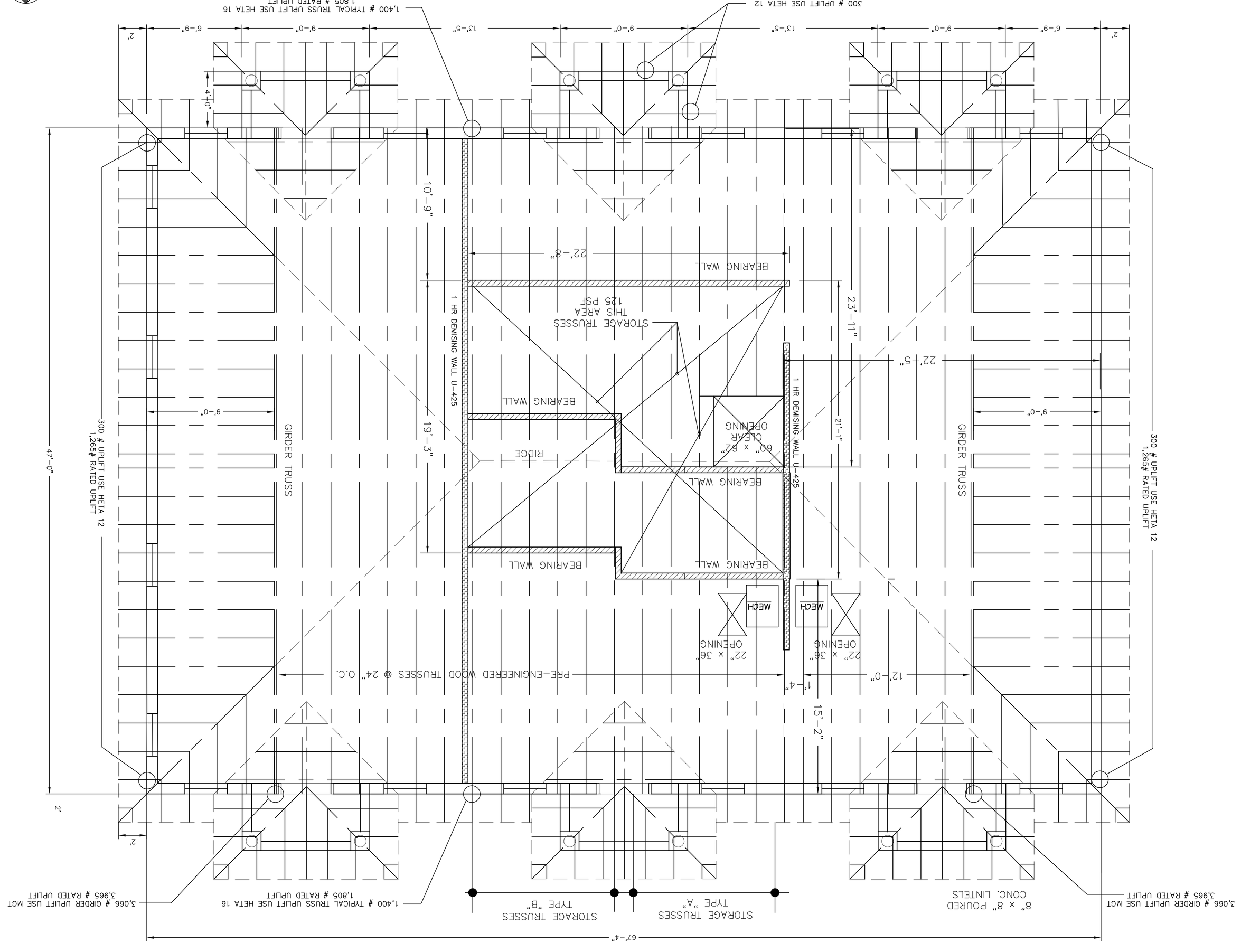

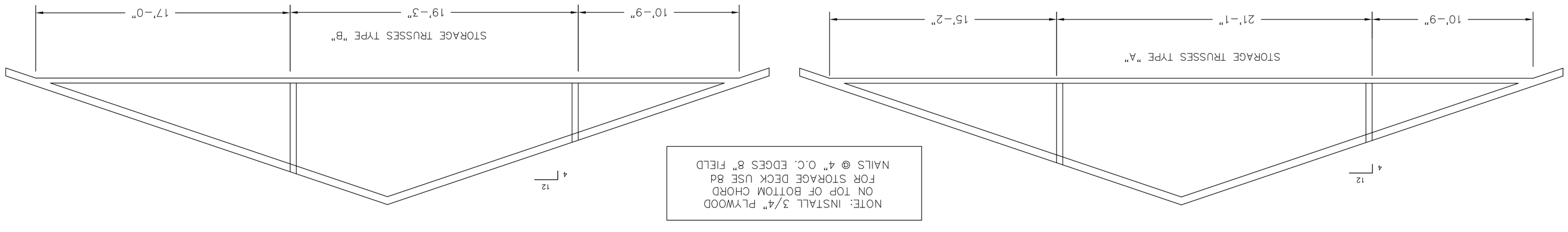

NOTE: INSTALL 3/4" PLYWOOD ON TOP OF BOTTOM CHORD FOR STORAGE DECK USE 8d NAILS @ 4" O.C. EDGES 8" FIELD

Job No. 13-19
Date 4-28-14
Sheet No. S-2 of 2

STATE OF FLORIDA
JOHN ANDREW ZIEMNICKI
NO. 12518
REGISTERED ARCHITECT

NEW BUILDING FOR:
CONSTANTINE CHIROPRACTIC
312 7TH STREET WEST
PALMETTO, FLORIDA

www.WDIArchitects.com
ARCHITECTS & ENGINEERS

WORLD DESIGN, INC.
4301 32nd Street West, Suite D-5
Bradenton, Florida 34205
NCARB CERTIFIED (941)-755-3934
FAX (941)-756-6869
FL AAC001570 EB 0007666 SC B88014
John A. Ziemnicki, A.I.A.
FL 12518 SC 3558 IL 11783 TN 23111

REVISIONS

FILE :

© COPYRIGHT 2013 WORLD DESIGN, INC.